LIBERA HADRON USAGE EXPERIENCE WITH EPICS

15 years of Libera at COSY

14.5.2025 I LIBERA WORKSHOP 2025
C. BÖHME

Mitglied der Helmholtz-Gemeinschaft

JÜLICH
Forschungszentrum

COOLER SYNCHROTRON COSY

- 184 m circumference
- Internal experiments and 3+2 external beam-lines
- Polarised and unpolarised protons and deuterons
- Momentum: 0.3 – 3.7 GeV/c
- 29 BPMs -> 8 Libera Hadron
- Cooling: 2 electron cooler, stochastic cooling
- Spin manipulation devices
  - Wien filter
  - Siberian snake
- In operation 1991 - 2023

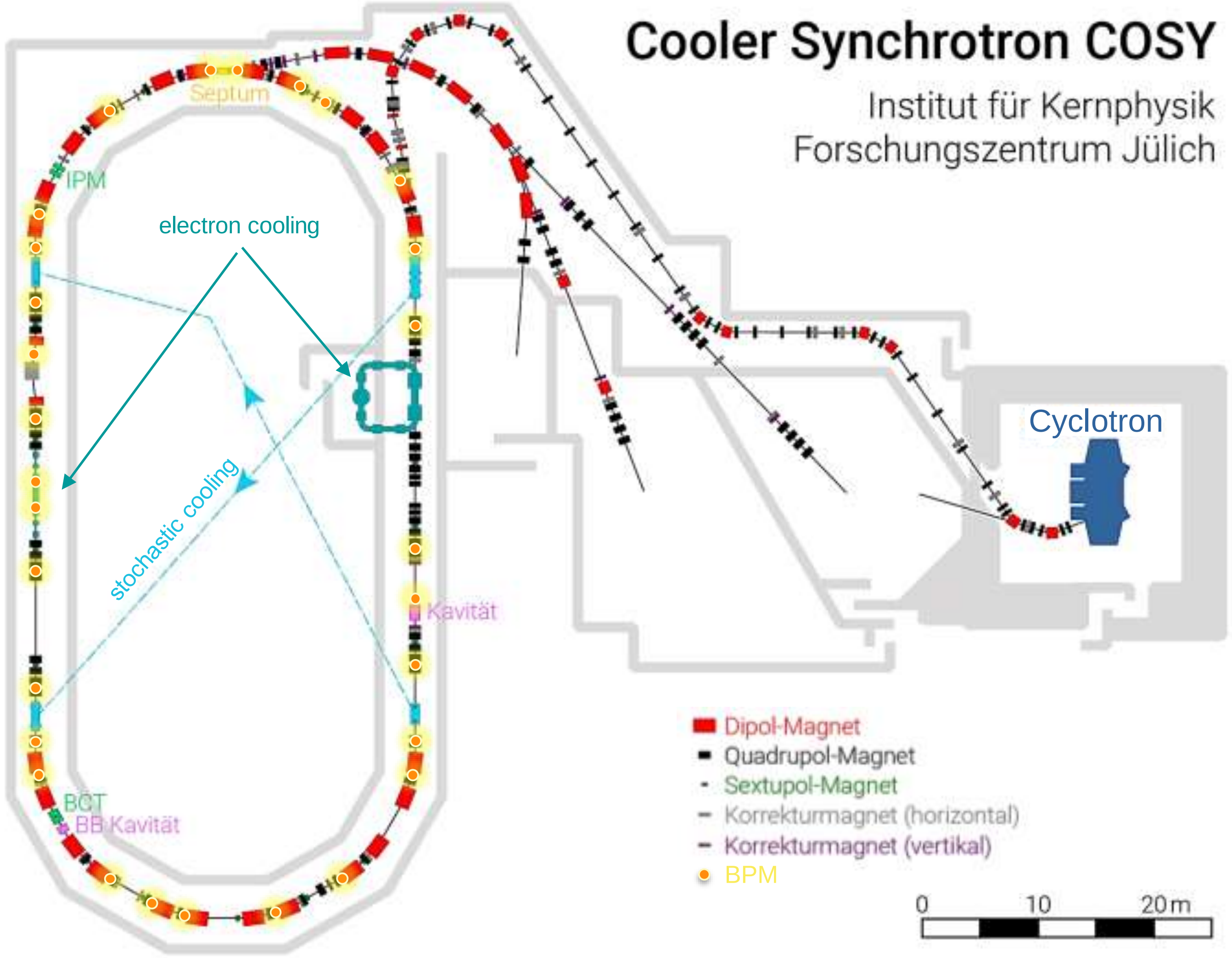
Cooler Synchrotron COSY
Institut für Kernphysik
Forschungszentrum Jülich
Septum
IPM
electron cooling
stochastic cooling
Kavität
BCT
BB Kavität
Cyclotron
Dipol-Magnet
Quadrupol-Magnet
Sextupol-Magnet
Korrekturmagnet (horizontal)
Korrekturmagnet (vertikal)
BPM
0
10
20m

GENERAL LAYOUT – INITIAL BPM (1990) POSITION CALCULATION

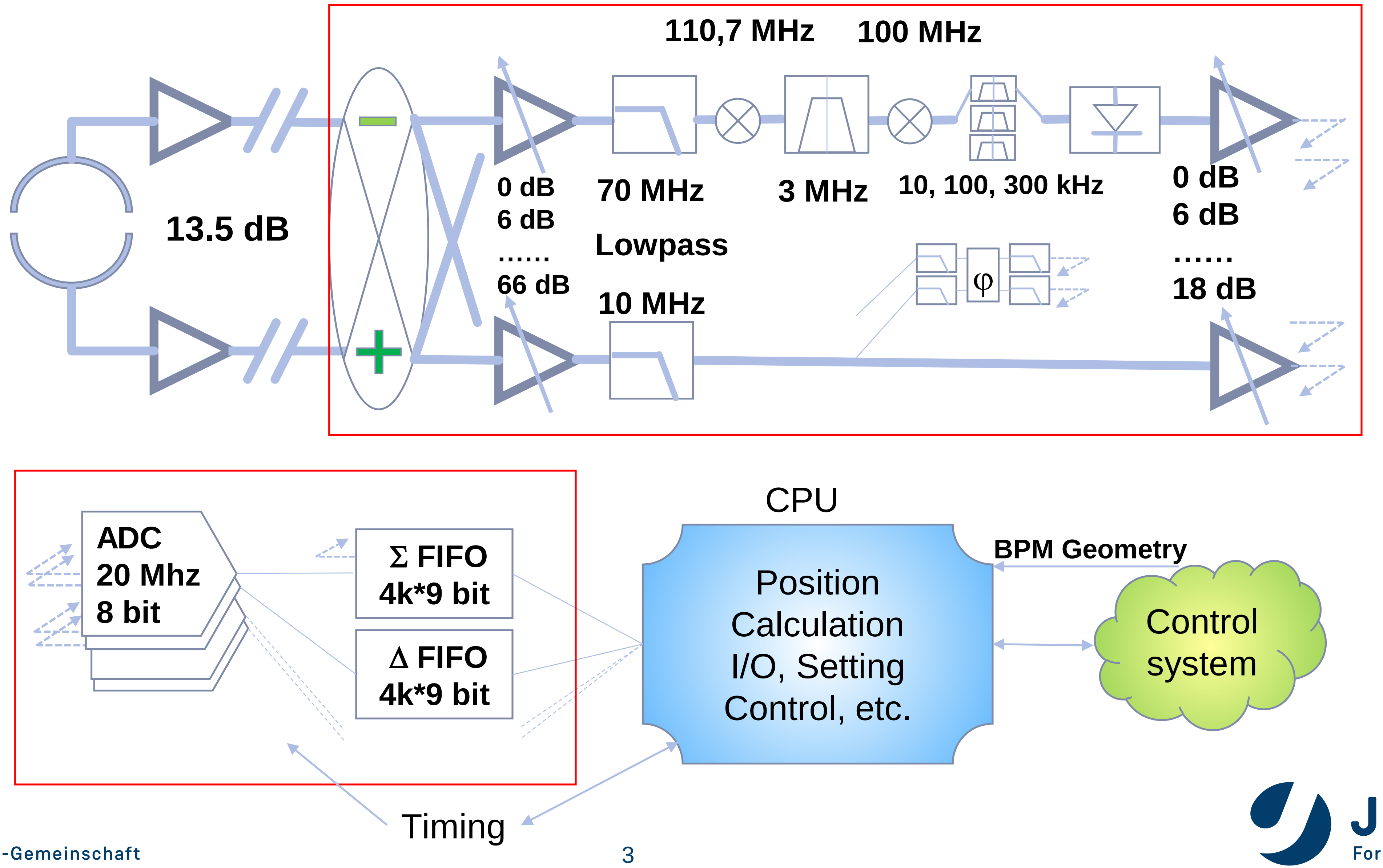

13.5 dB

110,7 MHz

100 MHz

0 dB
6 dB
……
66 dB

70 MHz

Lowpass

10 MHz

3 MHz

10, 100, 300 kHz

φ

0 dB
6 dB
……
18 dB

ADC
20 Mhz
8 bit

Σ FIFO
4k*9 bit

Δ FIFO
4k*9 bit

CPU

Position
Calculation
I/O, Setting
Control, etc.

BPM Geometry

Control
system

Timing

FIRST LIBERAS AT COSY

Zentrum für
Synchrotronstrahlung

- 4 Libera A bought in 2009
  - Programming (FPGA + Control) done at DELTA / TU-Dortmund

RS485
ethernet
SFP
power
Hadron
JÜLICH

2016: UPGRADE PLAN

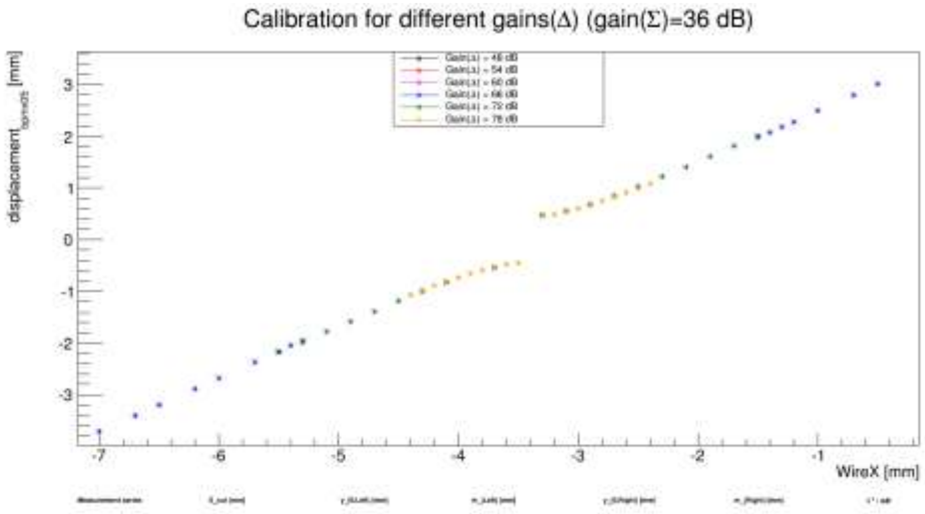

F. Hinder, Beam Position Monitors at COSY, JEDI internal note 13/2015

Libera Hadron

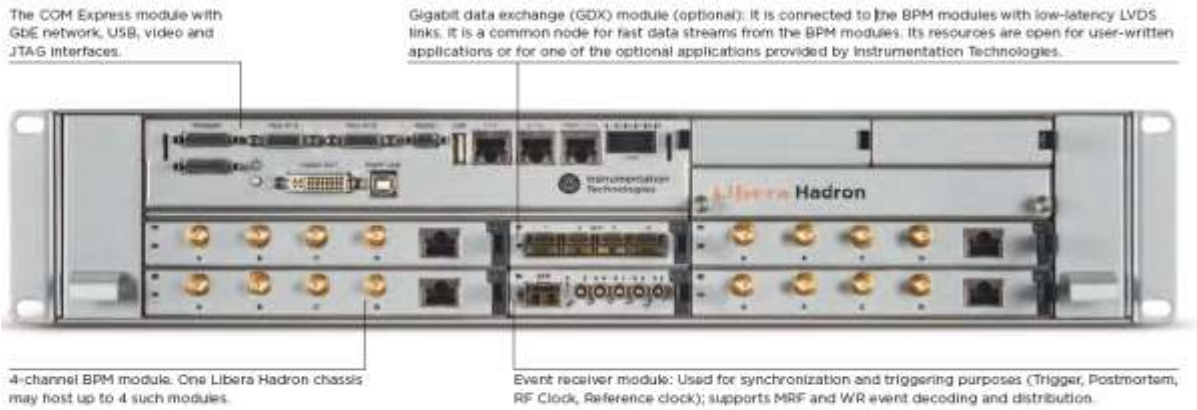

The COM Express module with GbE network, USB, video and JTAG interfaces.

Gigabit data exchange (GDX) module (optional): It is connected to the BPM modules with low-latency LVDS links. It is a common node for fast data streams from the BPM modules. Its resources are open for user-written applications or for one of the optional applications provided by Instrumentation Technologies.

4-channel BPM module. One Libera Hadron chassis may host up to 4 such modules.

Event receiver module: Used for synchronization and triggering purposes (Trigger, Postmortem, RF Clock, Reference clock); supports MRF and WR event decoding and distribution.

Spectrum Digitizer

Picture: Spectrum GmbH

NI Hardware / Software

Analog-To-Digital Conversion
General Purpose FPGA
Crate and controller

Picture: A. Alexandrov, MOBLA02, IBIC2015

UPGRADE DECISION

- 2016 COSY Upgrade
  - 1+9+3 Libera Hadron B (40 channels) bought
  - Transition to EPICS (Liberas 2nd EPICS device in use)

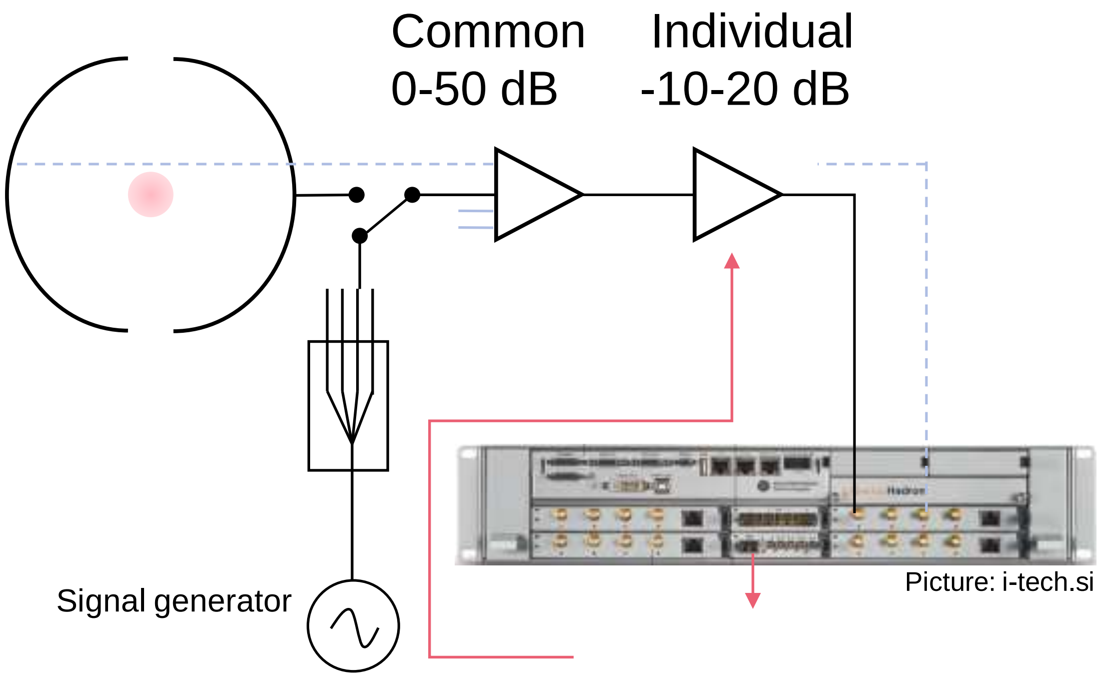
Common
0-50 dB
Individual
-10-20 dB
Signal generator

Picture: i-tech.si

- With upgrade new pre-amps developed
- Automated calibration with signal generator and precise splitters

EXPERIENCES - HARDWARE

- 10 units running (8 production + 2 test) with 35 ADC cards 2018 – 2023
  - 3 additional units temporary usage at user experiments
- One unit had to be sent back for repair (firmware issue)
- One ADC card was replaced (March ‘21), but then working fine in test unit
- New order of Hardware came with new firmware
  -> upgrade of old units seamless

EXPERIENCES - SOFTWARE

- IOC stability
  - When used heavily we managed to get the IOC unstable quite easy
  - Failing IOC has impact on other software functions like SSH access or libera-ireg function
  - Software update reduced instability significantly
- Regular re-boots of the systems necessary
  - Software reboot: about one per day (out of 8 devices)
  - Hardware reboot: about once a month (out of 8 devices)

USER APPLICATIONS BASED ON LIBERA DATA

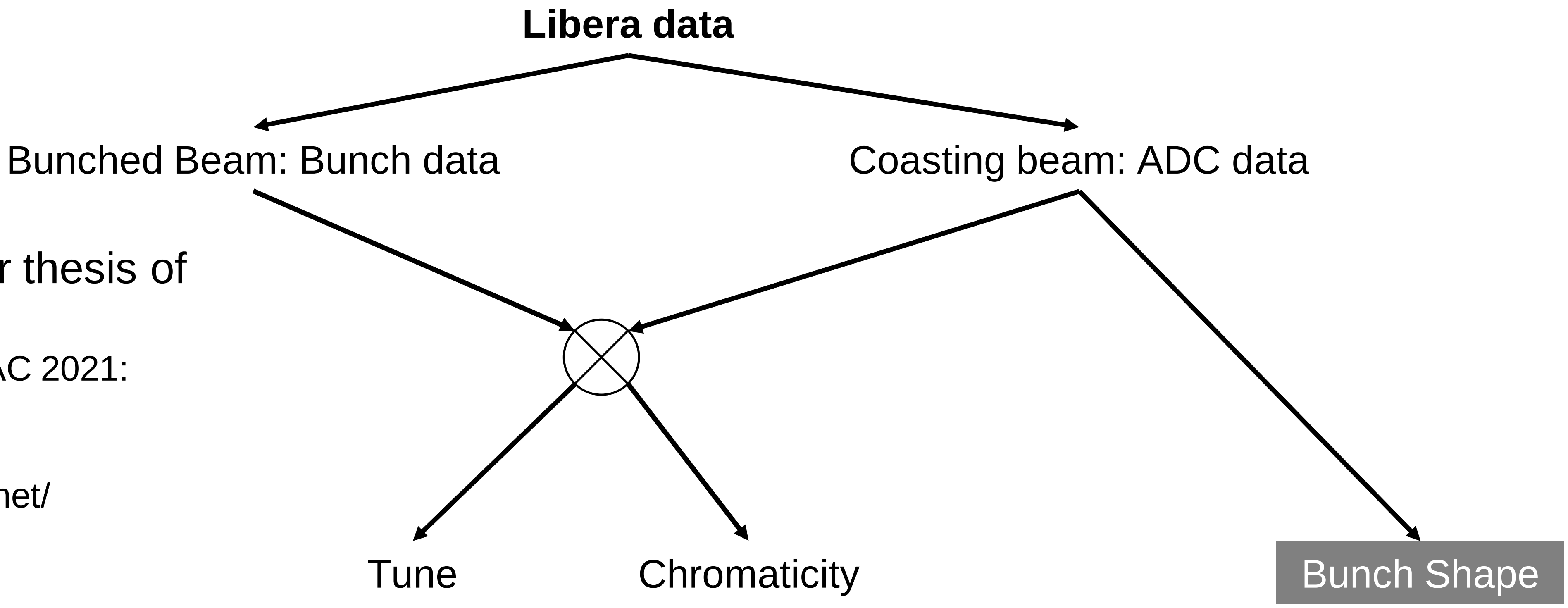
Libera data

Bunched Beam: Bunch data

Coasting beam: ADC data

Tune

Chromaticity

Bunch Shape

- Done within the master thesis of Philipp Niedermayer:
  - Presented on IPAC 2021: MOPAB319,
  - Thesis available: http://hdl.handle.net/2128/27943

- Data is downloaded to external device for processing
  - Data transfer took long, in the minute region (binary data, direct transfer)
  - Gbit network to Libera, 10 Gbit interlinks between routers

EXPERIENCES - SPECIAL PROBLEMS

- Barrier Bucket operation
  - Hard edges of a bunch due to RF settings
- Bunch recognition has problems to detect a position
- Inversion of ADC data necessary
  - By editing XML-settings possible
  - Fast switching (e.g. PV) preferred for fast changes of mode

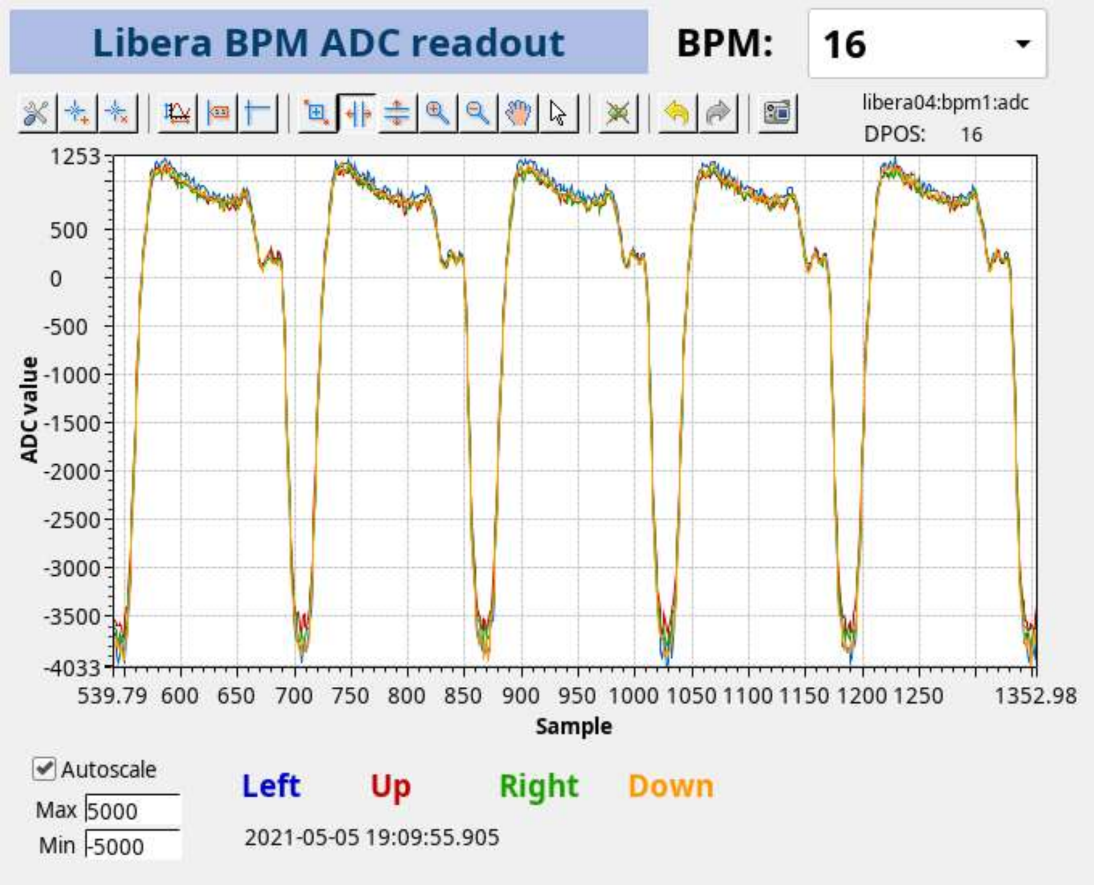

Libera BPM ADC readout

BPM: 16

libera04:bpm1:adc
DPOS: 16

☑ Autoscale
Max 5000
Min -5000

2021-05-05 19:09:55.905

1253
500
0
-500
-1000
-1500
-2000
-2500
-3000
-3500
-4033
ADC value
539.79
600
650
700
750
800
850
900
950
1000
1050
1100
1150
1200
1250
1352.98
Sample
Left
Up
Right
Down

Picture: V. Kamerdzhiev

CONCLUSION

- The Libera offers a wide range of information of beam properties.
  - These can be used for calculating vital machine parameters.
  - Basic operation within a short timeline, further usage setup takes time
- Updates / bugfixes available, but not regular updates
  - Same applies to e.g. crate-PC
- Instabilities could never been complete resolved
  - But in the end it was “good enough”
- Data download took long
  - For own applications huge amounts of RAW data needed
  - Although quite fast hardware we never got faster than some minutes of download time
  - Compensation by utilizing smaller data base (worse statistics)

SIDE NOTE: RED PITAYA

- Xilinx ZYNQ 7010 SoC (CPU & FPGA)
- 125 MSPS, two simultaneous inputs

- Red Pitaya used in a large variety of applications
- Basic functionality programmed in FPGA
- EPICS server running on ARM part
- Software source can be shared on request *(https://jugit.fz-juelich.de/IKP/COSY/redpitaya)*

Re-using G-64 crates to arrange Red Pitayas within a crate. Carrier boards used for mechanical stability and power, not for data.

Details of G-64*: 10th ICALEPCS;* D. Calcoen; „THE G-64 BUS AT CERN AFTER 25 YEARS OF OPERATION"
https://accelconf.web.cern.ch/ica05/proceedings/pdf/p1_095.pdf

THANK YOU

- Research center aerial view

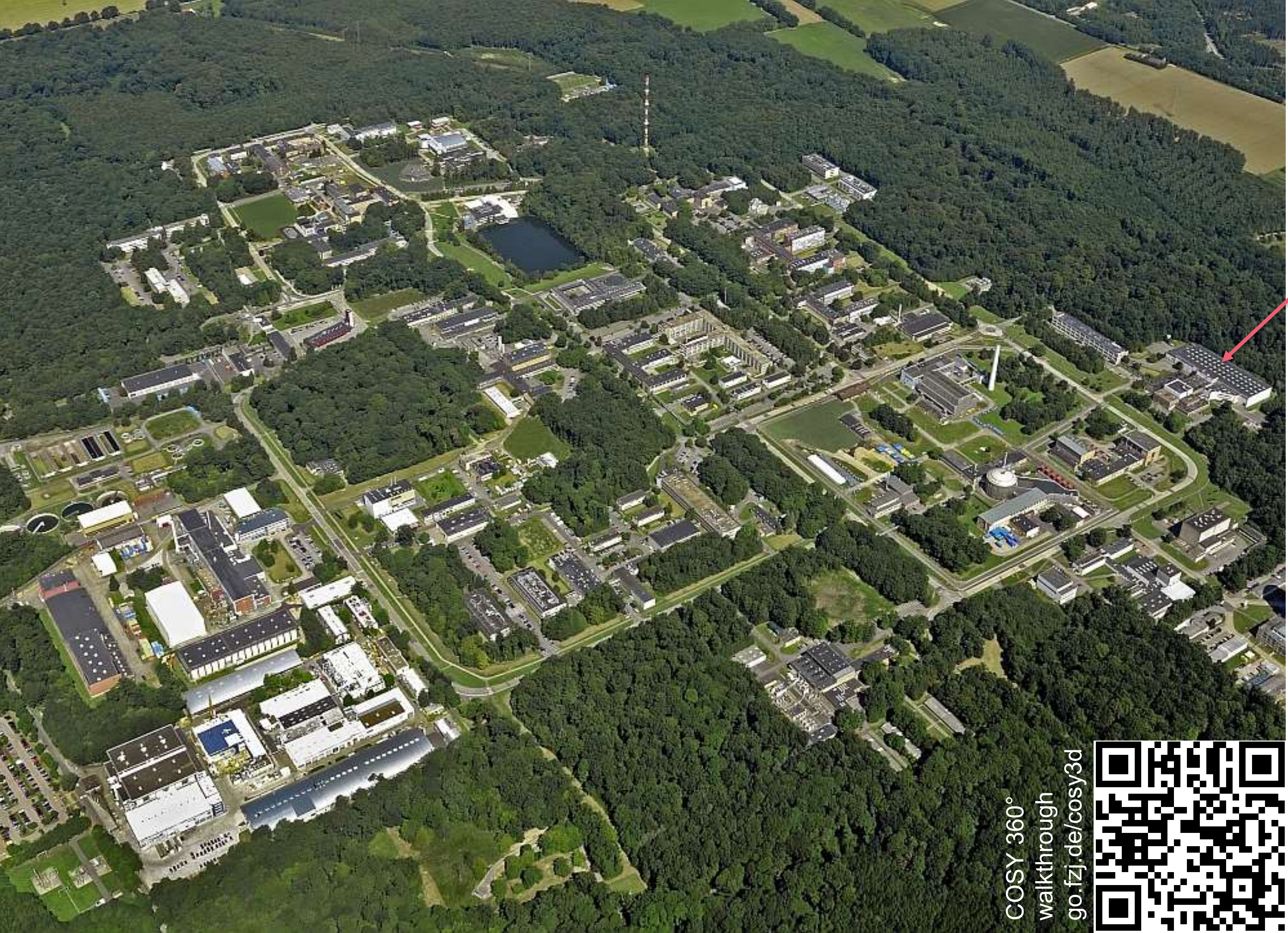
COSY accelerator

COSY 360° walkthrough
go.fzj.de/cosy3d

GEOMAR Helmholtz-Zentrum für Ozeanforschung Kiel
Deutsches Elektronen-Synchrotron DESY
Helmholtz-Zentrum Hereon
Alfred-Wegener-Institut, Helmholtz-Zentrum für Polar- und Meeresforschung
Max Delbrück Center
Helmholtz-Zentrum Berlin für Materialien und Energie
Helmholtz-Zentrum für Infektionsforschung
GFZ Helmholtz-Zentrum für Geoforschung
Helmholtz-Zentrum für Umweltforschung – UFZ
Forschungszentrum Jülich
Deutsches Zentrum für Luft- und Raumfahrt
Helmholtz-Zentrum Dresden-Rossendorf
Deutsches Zentrum für Neurodegenerative Erkrankungen (DZNE)
GSI Helmholtzzentrum für Schwerionenforschung
CISPA Helmholtz-Zentrum für Informationssicherheit
Deutsches Krebsforschungszentrum
Karlsruher Institut für Technologie
Helmholtz Munich

Picture: Helmholz-Gemeinschaft

JÜLICH
Forschungszentrum